REVISION RECORD			
REV.	CONTENT	MOD.	DATE
0	初版发行		

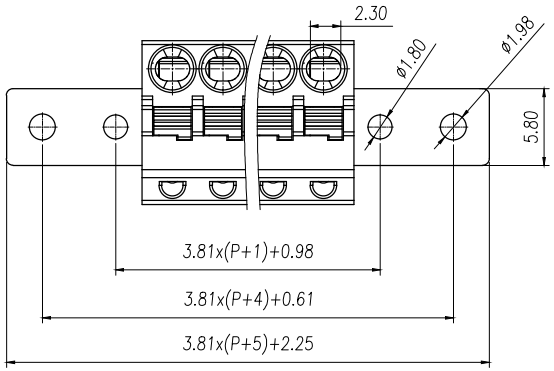

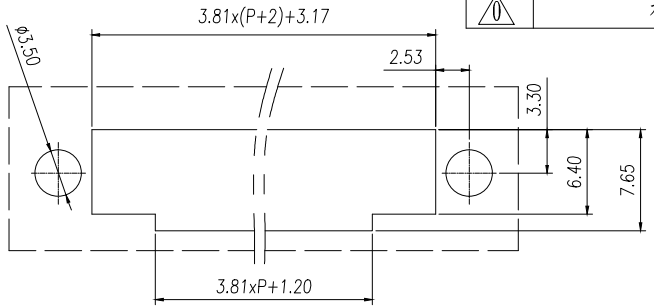

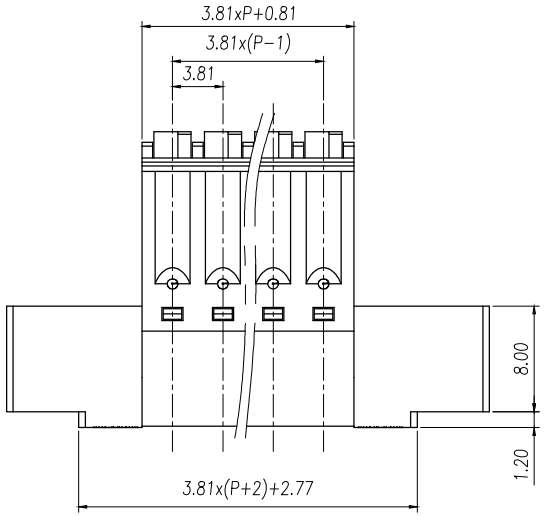

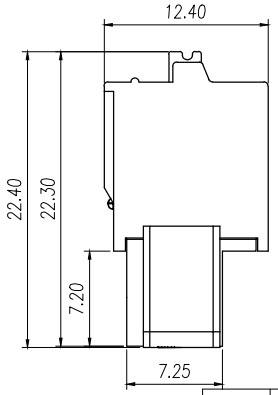

NOTES1:
UL Standard:
1.Voltage Rating: 300V, Current Rating: 8A
2.Suitable Electric Wire: 28-16AWG
IEC Standard:
1.Voltage Rating: 160V, Current Rating: 8A
2.Suitable Electric Wire: 26-14AWG

NOTES2:
1.Pitch : 3.81mm
2.Withstand Voltage : AC2500V for 1 minute
3.Using Temperature Range : -40℃ ~ +105℃

技术要求1:
UL 标准:
1.额定电压: 300V, 额定电流: 8A
2.适用线规: 28~16AWG
IEC 标准:
1.额定电压: 160V, 额定电流: 8A
2.适用线规: 26~14AWG

技术要求2:
1.间距: 3.81mm
2.耐电压值: AC2500V/min
3.使用条件: -40℃~+105℃

NO.	NAME OF PART	NO. OF PART	Q'TY	MATERIAL	NOTES
7	LZ1HM-7.62耳朵螺母	SM00B300000V	2	黄铜	
6	LZ1-5.08-螺母	SM00B250000V	2	黄铜	
5	LC60-3.81五金件	2079B0001AV	P	磷青铜	镀亮锡
4	LC6-3.81-弹片	F2A0DLC638BV	P	不锈钢	
3	LC6-3.81-按钮	1043D0YXXAV	P	POM	
2	LC60MGC1-3.81-盖板	2096C0YXXAV	1	PA66-V0	
1	LC6-3.81-本体	1043A0YXXAV	1	PA66-V0	

DES.	CMZ	DATE	25/06/11	UNITS	MM	THIRD ANGLE PROJECTION	SHEET
CHK.		DATE		SIZE	A4		1 of 1
APP.		DATE		SCALE	1:1	DWG NO. SP-1-2082140	REV: V0

上海联捷电气有限公司
Shanghai Elinker Electric C O.,LTD

TITLE: LC60MGC1-3.81-XXP-1Y-00A (XXP表示几位，1Y表示任意颜色)
LC60MGC1-3.81-成品

	pitch dimension			Naminal dimension					
variable range	over 0 to 6	over 6 to 10	over 10 to 24	over 0 to 30	over 30 to 60	over 60 to 100	over 100 to 150	over 150	
Tolerance	±0.1	±0.15	±0.25	±0.2	±0.3	±0.5	±0.7	±1.0	0.05/10